WaterMatic 300

Part # 18050

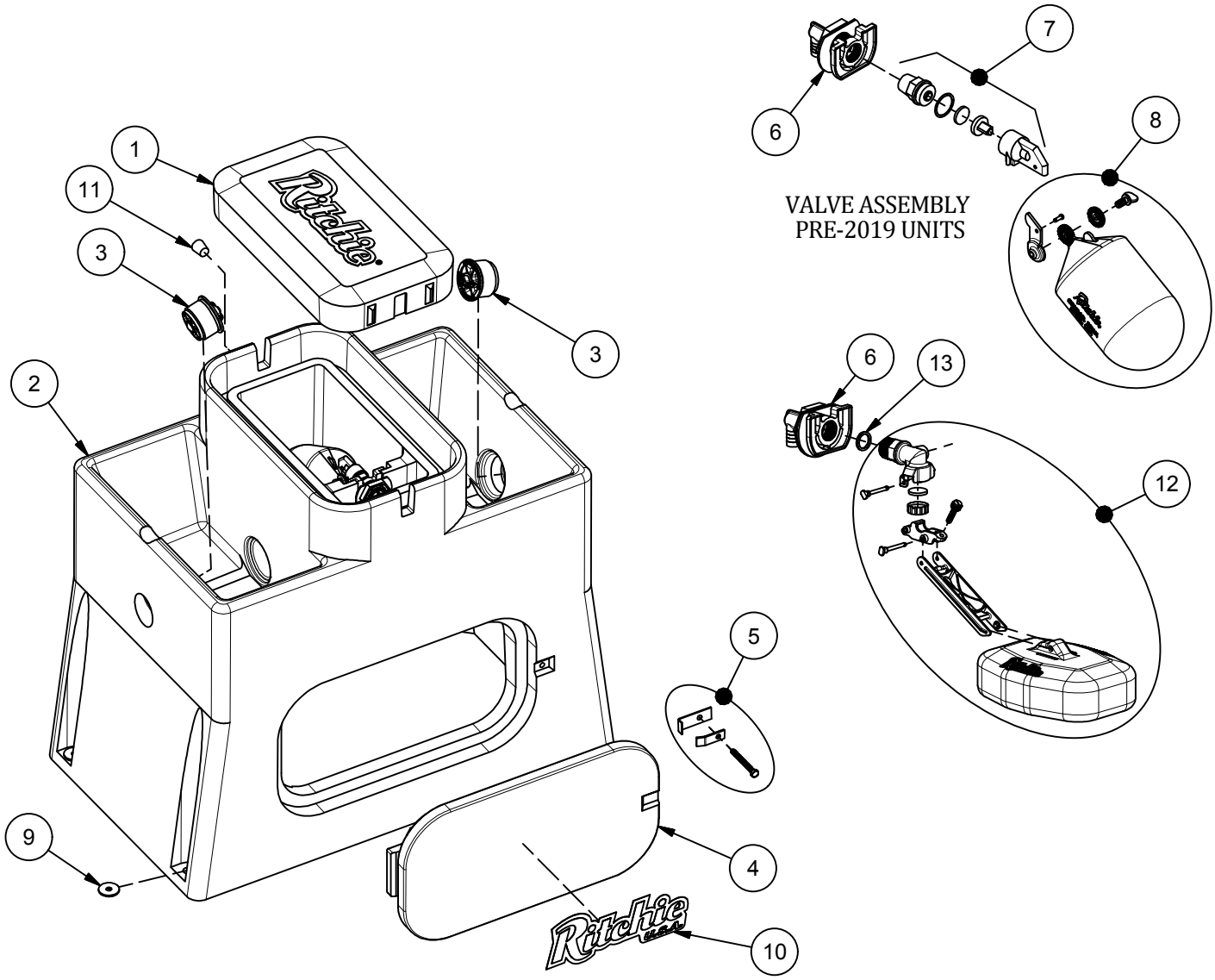

Item	Part #	Description	Qty	·	·	Item	Part #	Description	Qty
1	18048	WaterMatic 300 Cover	1			9	18318	Bolt Down Washer (4/pkg)	2 pkgs
2	18049	WaterMatic 300 Base	1			10	18653	Ritchie Label 12" (1/pkg)	1 pkg
3	18470	Drain Plug Ritchie 3"	2 pkgs			11	18633	Plug #3 - Water Channel	1 pkg
4	16562	Access Panel 10"x20"	1			12	18832	HP 3/4" Valve Assembly	1
5	18147	Access Panel Hardware pkg	1 pkg			13	18475	O-Ring Valve Seal Pkg (4/pkg)	1
6	18838	HP Bracket Assy Pkg	1 pkg			NS	14866	Seal Foam 10' Roll	2
7	15377	Green Valve 3/4" Male pkg	1 pkg			NS	15931	Hose Clamp 1" SS (5/pkg)	1 pkg
8	18314	Float with Hardware pkg	1 pkg			NS	18614	Adapter 3/4" x 5/8" HB	1 pkg
	18313	Hardware for Float pkg	1 pkg			NS	18096	WMatic 300 Accessory pkg	1 pkg